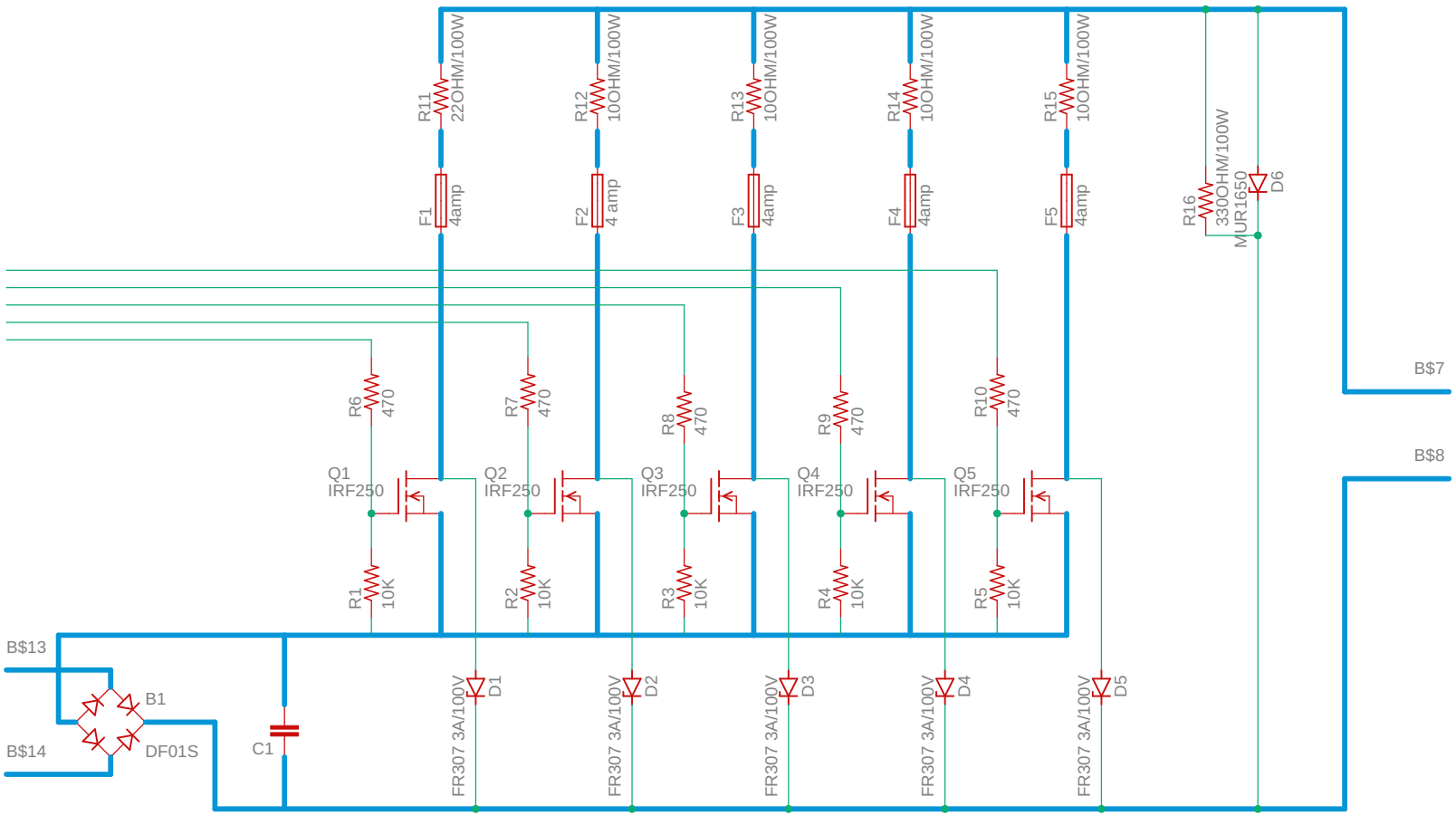
R11
22OHM/100W
R12
10OHM/100W
R13
10OHM/100W
R14
10OHM/100W
R15
10OHM/100W
F1
4amp
F2
4 amp
F3
4amp
F4
4amp
F5
4amp
R16
330OHM/100W
MUR1650
D6
B$7
B$8
R6
470
R7
470
R8
470
R9
470
R10
470
Q1
IRF250
Q2
IRF250
Q3
IRF250
Q4
IRF250
Q5
IRF250
R1
10K
R2
10K
R3
10K
R4
10K
R5
10K
B$13
B$14
B1
DF01S
C1
FR307 3A/100V
D1
FR307 3A/100V
D2
FR307 3A/100V
D3
FR307 3A/100V
D4
FR307 3A/100V
D5