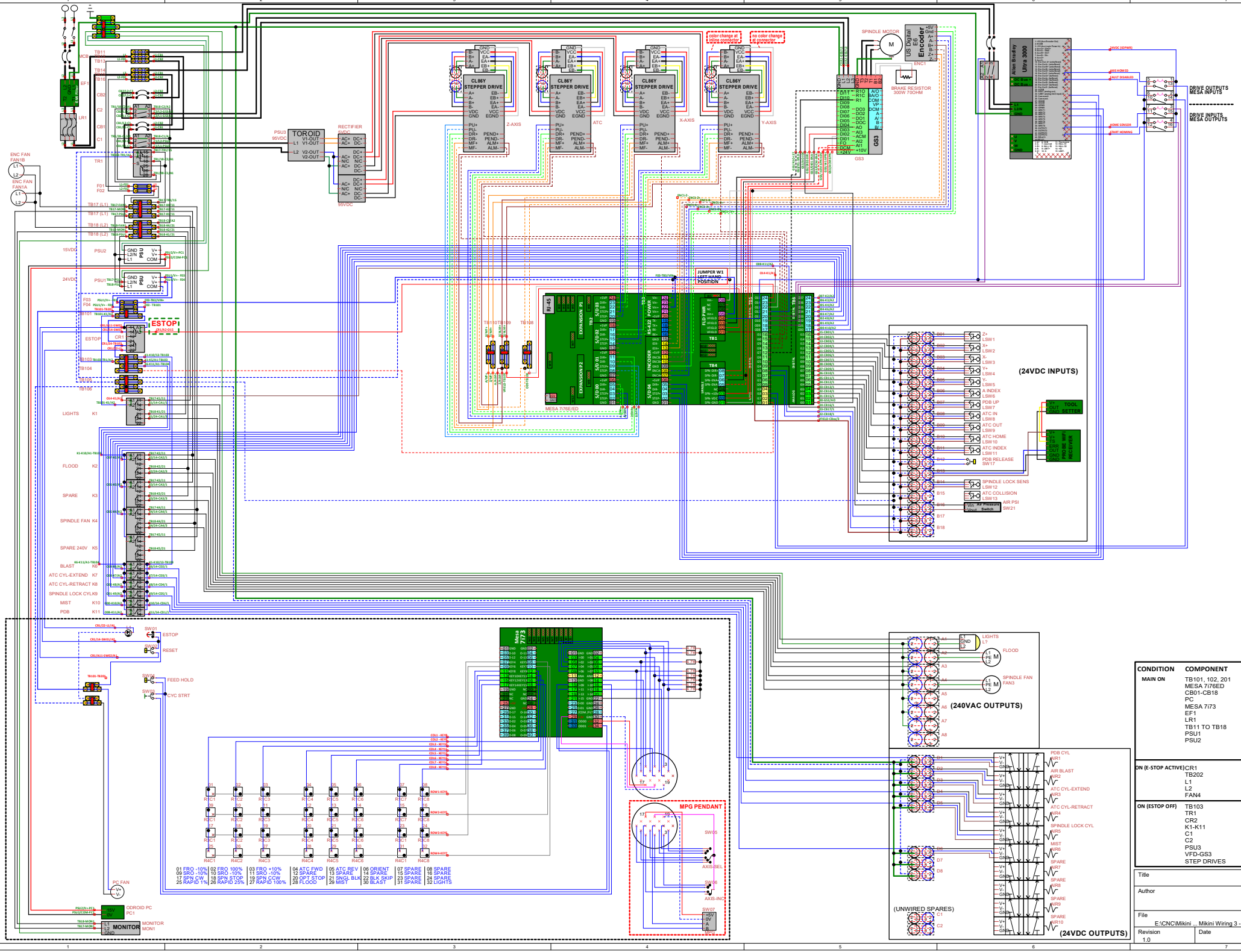

CONDITION	COMPONENT	VOLTAGE-IN
MAIN ON	TB101, 102, 201	24VDC
	MESA 7i76ED	24VDC
	CB01-CB18	24VDC
	PC	15VDC
	MESA 7i73	5VDC (FROM 7i76ED)
	EF1	240VAC
	LR1	240VAC
	TB11 TO TB18	240VAC
	PSU1	240VAC
	PSU2	240VAC
ON (E-STOP ACTIVE)	CR1	24VDC
	TB202	24VDC
	L1	24VDC
	L2	24VDC
	FAN4	24VDC
ON (ESTOP OFF)	TB103	24VDC
	TR1	24VDC
	CR2	24VDC
	K1-K11	24VDC
	C1	240VAC
	C2	240VAC
	PSU3	240VAC
	VFD-GS3	240VAC (BUSS)
	STEP DRIVES	95VDC

Title	
Author	
File	E:\CNC\Mikini ... Mikini Wiring 3 - REV27.dsn
Document	
Revision	1.0
Date	
Sheets	1 of 1