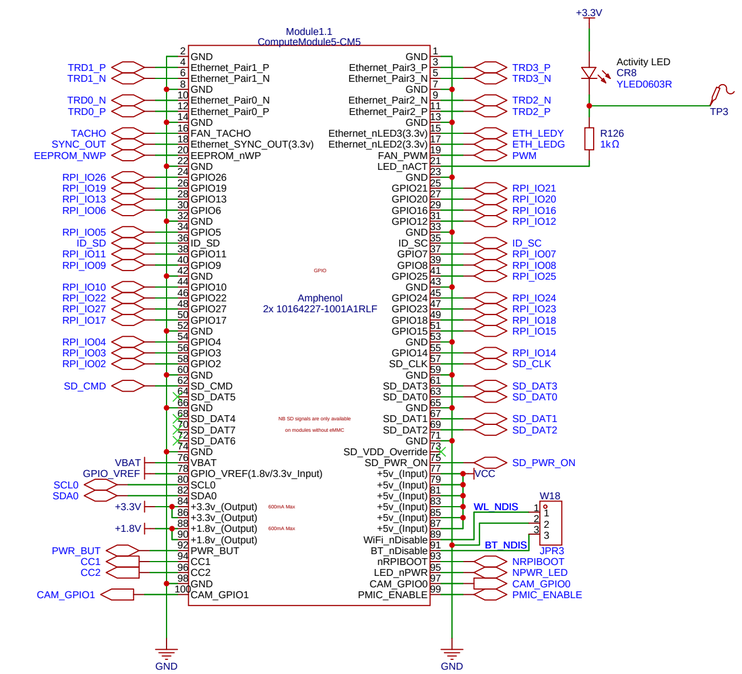

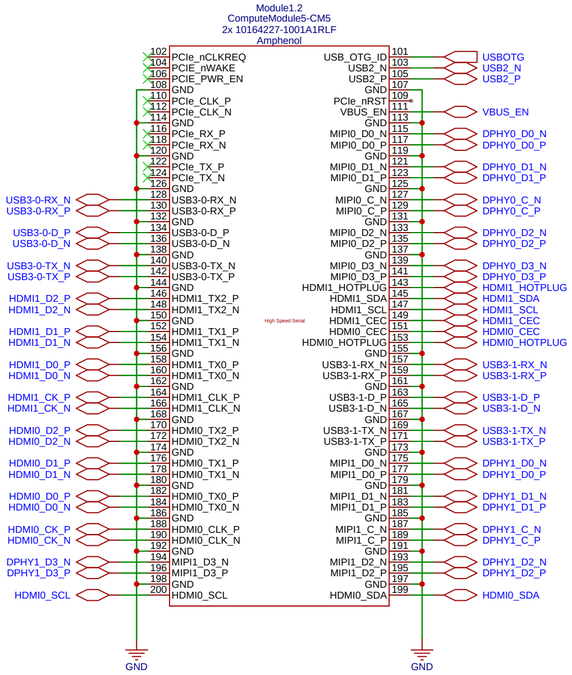

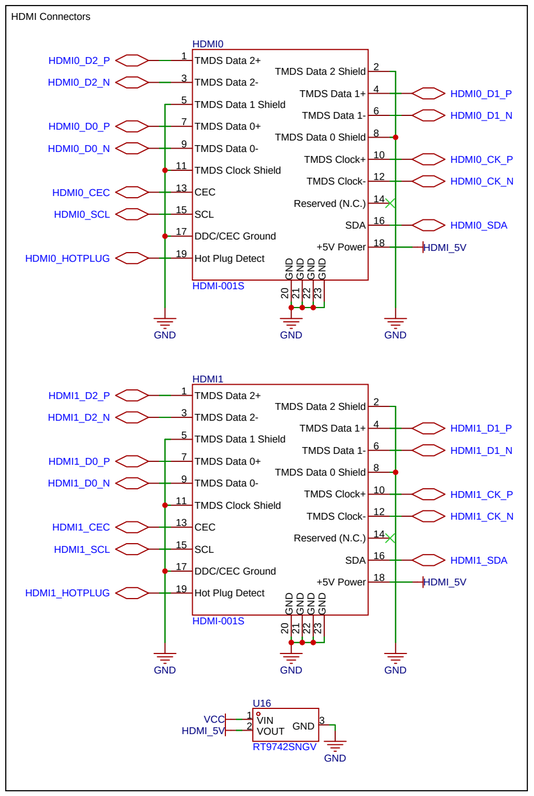

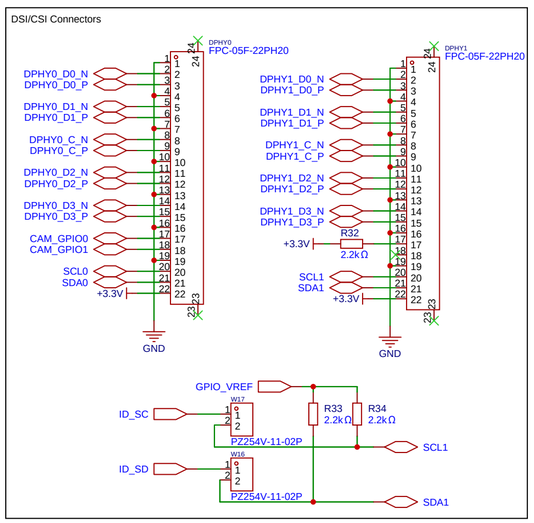

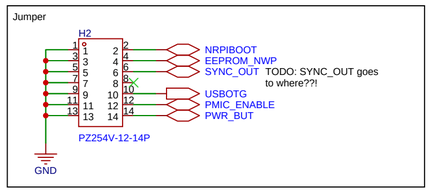

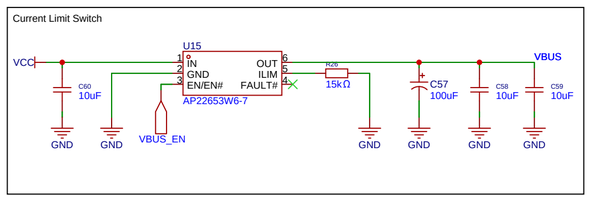

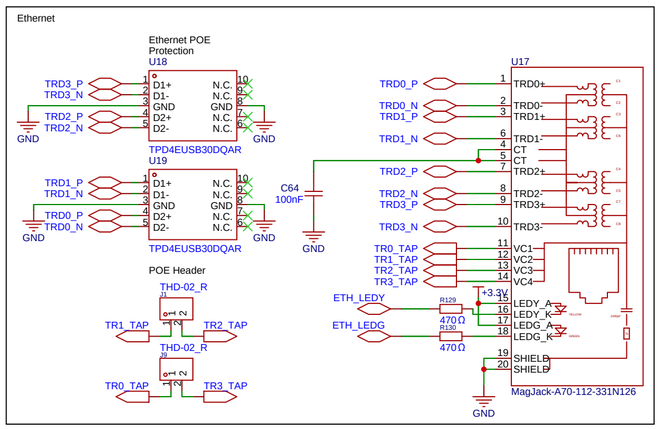

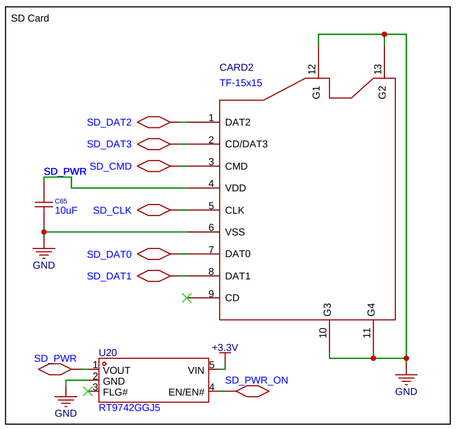

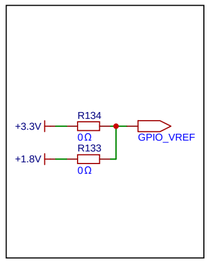

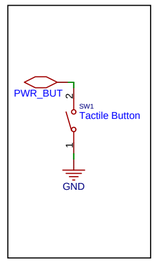

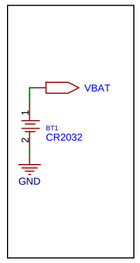

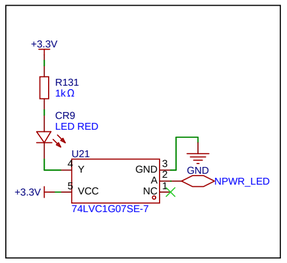

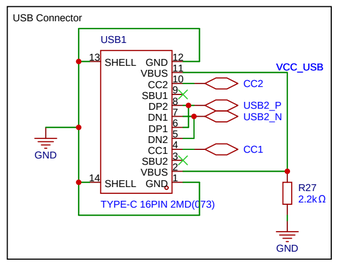

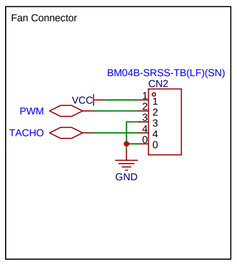

Schematic	7C80-RPICM5	Create at	2025-02-02
		Update at	2025-02-20
Board	Board1	Page	raspberryPiComputeModule5
Drawn	7C81-RPICM5		
Reviewed			
		Version	Size
		V1.0	A4
		Page 2 Total 2	
		EasyEDA.com	