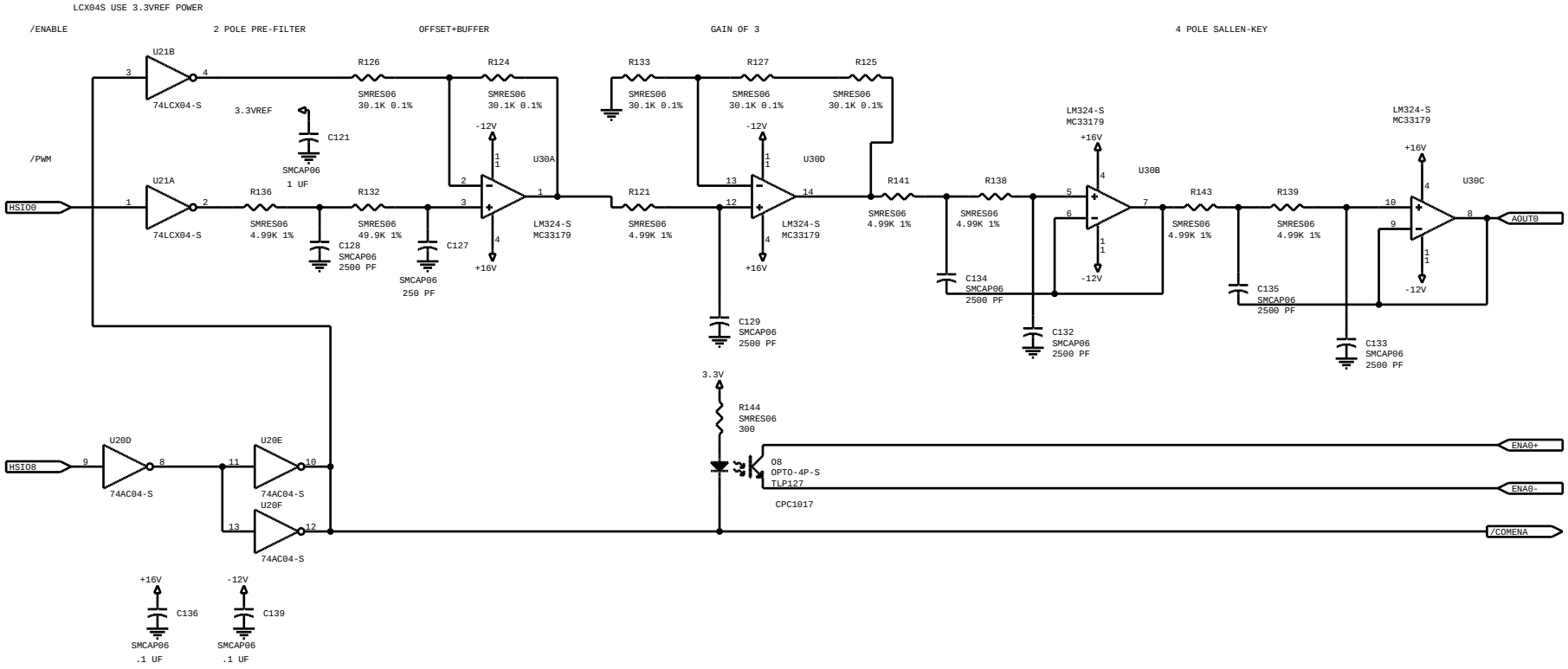

MESA ELECTRONICS

Title	7I97 ANALOG FILTER 0	
Size B	Document Number	REV
Date: May 9, 2023	Sheet 11 of 24	