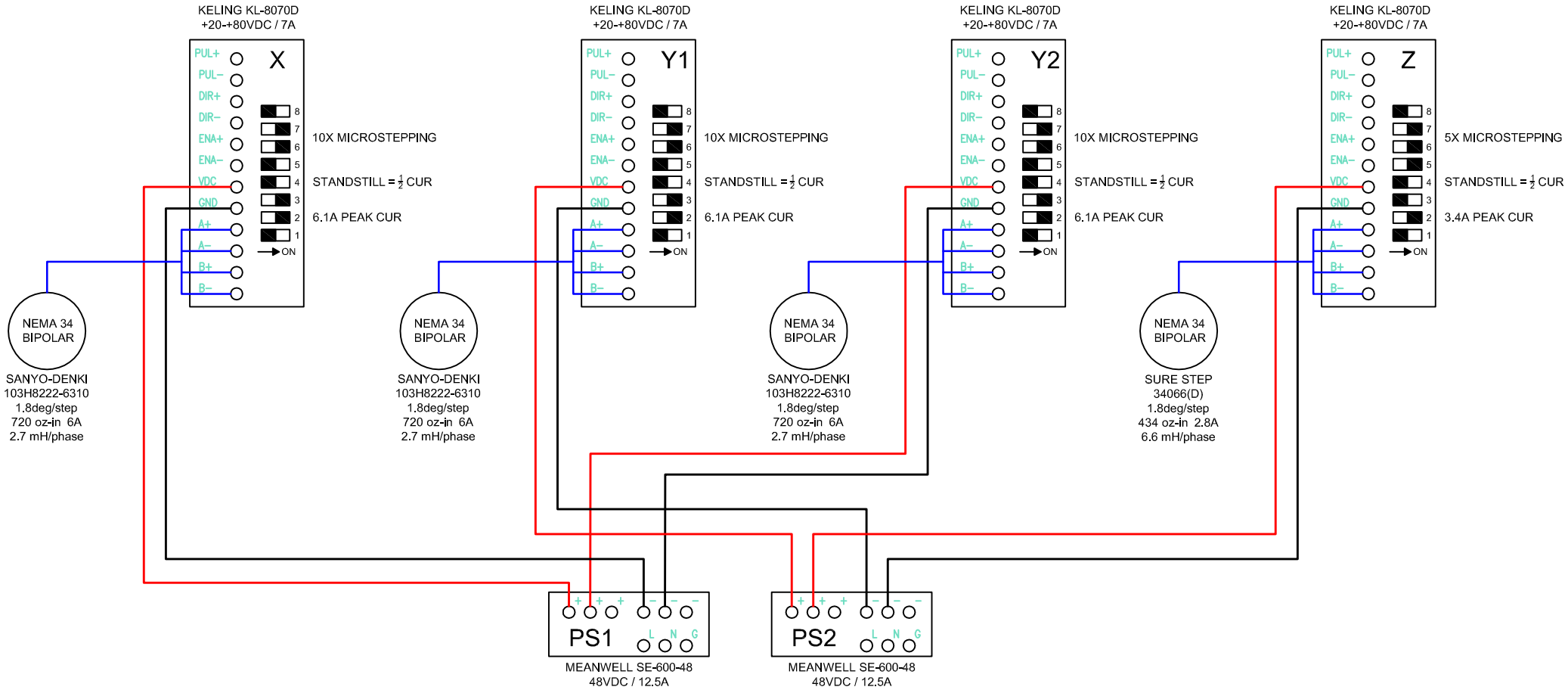
KELING KL-8070D
+20-+80VDC / 7A
X
PUL+
PUL−
DIR+
DIR−
ENA+
ENA−
VDC
GND
A+
A−
B+
B−
10X MICROSTEPPING
STANDSTILL = ½ CUR
6.1A PEAK CUR
ON
NEMA 34
BIPOLAR
SANYO-DENKI
103H8222-6310
1.8deg/step
720 oz-in 6A
2.7 mH/phase
KELING KL-8070D
+20-+80VDC / 7A
Y1
10X MICROSTEPPING
STANDSTILL = ½ CUR
6.1A PEAK CUR
NEMA 34
BIPOLAR
SANYO-DENKI
103H8222-6310
1.8deg/step
720 oz-in 6A
2.7 mH/phase
KELING KL-8070D
+20-+80VDC / 7A
Y2
10X MICROSTEPPING
STANDSTILL = ½ CUR
6.1A PEAK CUR
NEMA 34
BIPOLAR
SANYO-DENKI
103H8222-6310
1.8deg/step
720 oz-in 6A
2.7 mH/phase
KELING KL-8070D
+20-+80VDC / 7A
Z
5X MICROSTEPPING
STANDSTILL = ½ CUR
3.4A PEAK CUR
NEMA 34
BIPOLAR
SURE STEP
34066(D)
1.8deg/step
434 oz-in 2.8A
6.6 mH/phase
PS1
L N G
MEANWELL SE-600-48
48VDC / 12.5A
PS2
L N G
MEANWELL SE-600-48
48VDC / 12.5A